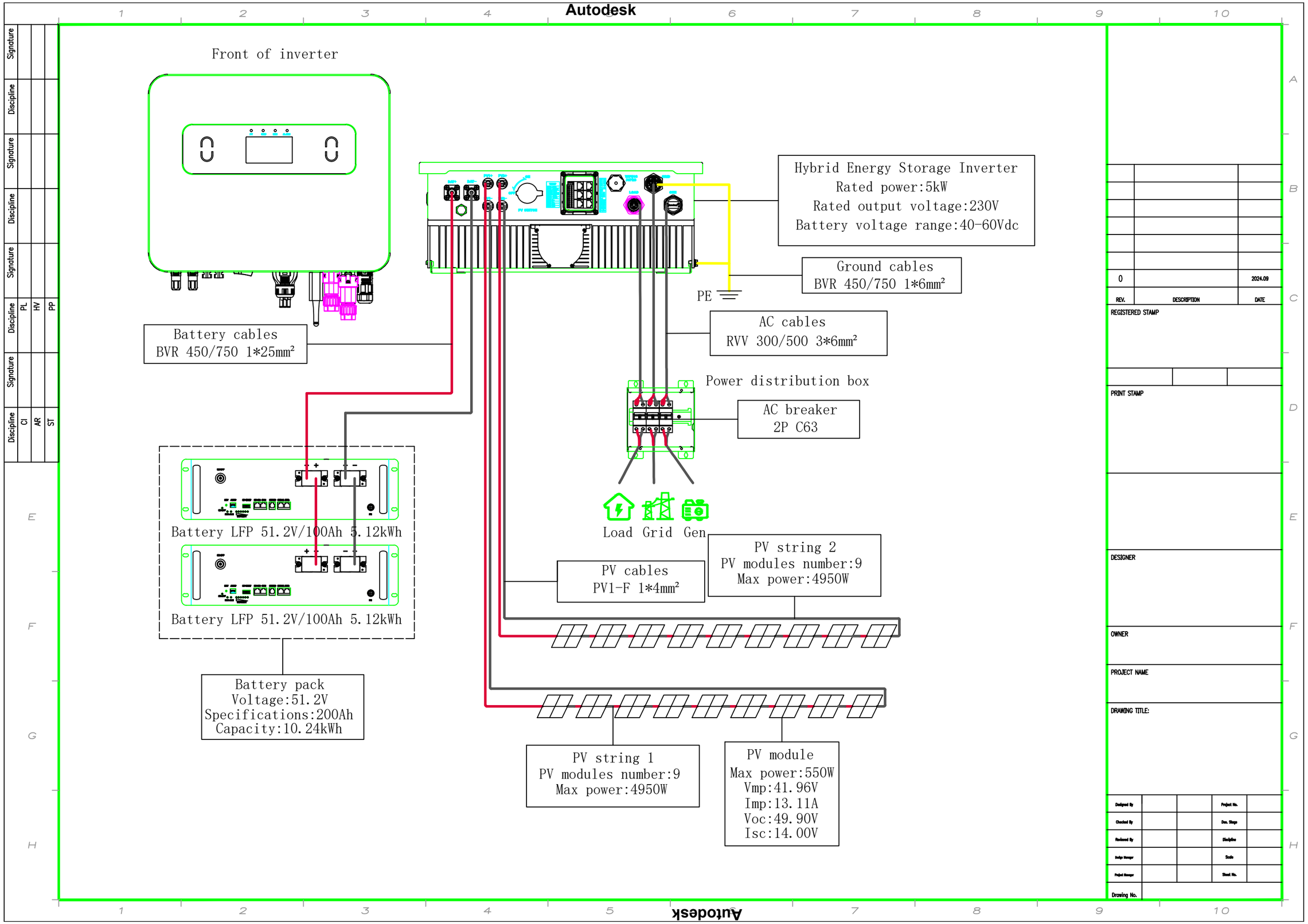
Autodesk
Front of inverter
Hybrid Energy Storage Inverter
Rated power:5kW
Rated output voltage:230V
Battery voltage range:40-60Vdc
Ground cables
BVR 450/750 1*6mm²
PE
AC cables
RVV 300/500 3*6mm²
Battery cables
BVR 450/750 1*25mm²
Power distribution box
AC breaker
2P C63
Load Grid Gen
Battery LFP 51.2V/100Ah 5.12kWh
Battery LFP 51.2V/100Ah 5.12kWh
PV cables
PV1-F 1*4mm²
PV string 2
PV modules number:9
Max power:4950W
Battery pack
Voltage:51.2V
Specifications:200Ah
Capacity:10.24kWh
PV string 1
PV modules number:9
Max power:4950W
PV module
Max power:550W
Vmp:41.96V
Imp:13.11A
Voc:49.90V
Isc:14.00V
REV.
DESCRIPTION
DATE
0
2024.09
REGISTERED STAMP
PRINT STAMP
DESIGNER
OWNER
PROJECT NAME
DRAWING TITLE:
Drawing No.
Autodesk