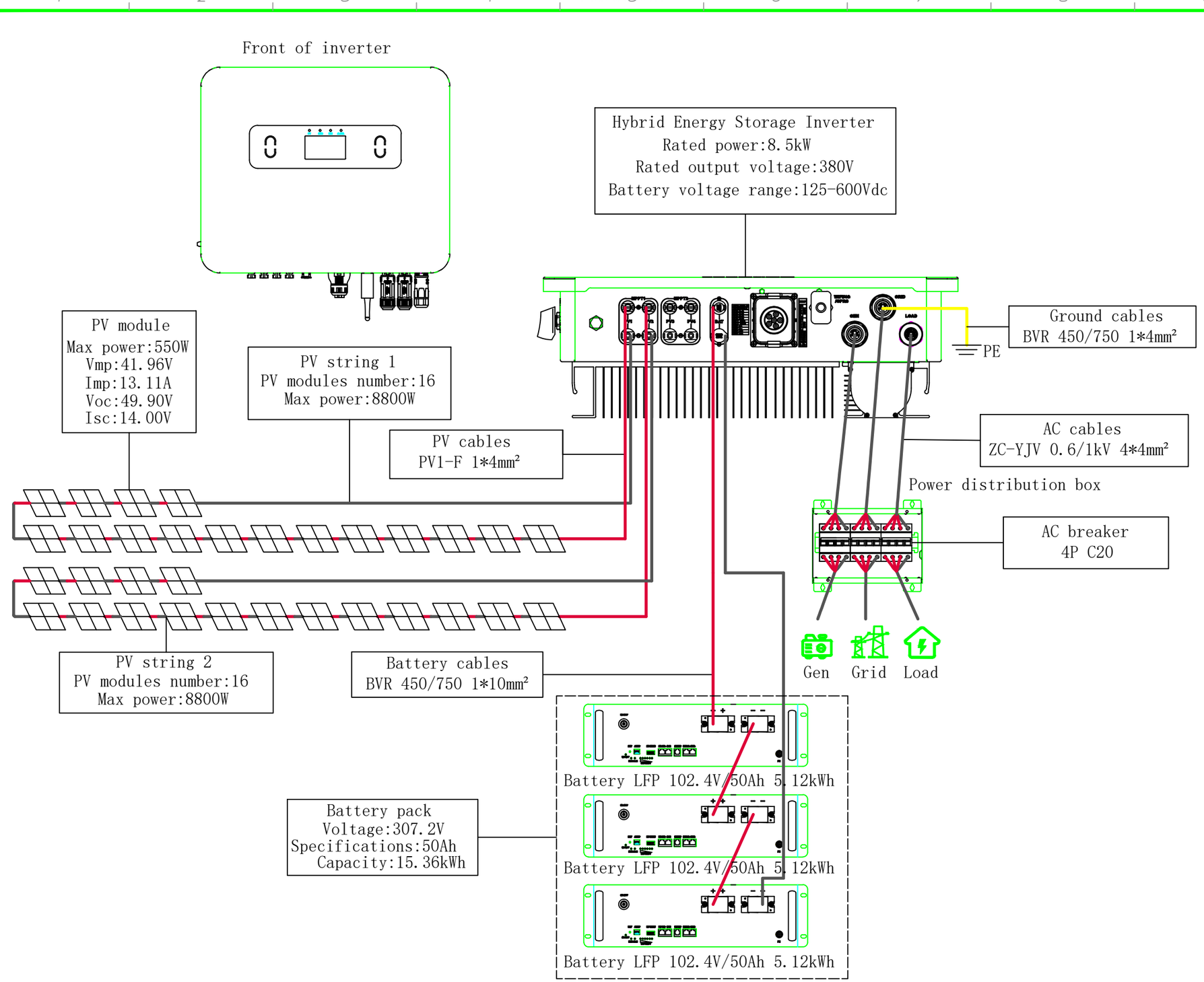

REV.	DESCRIPTION	DATE
0		2024.09

REGISTERED STAMP

PRINT STAMP

DESIGNER

OWNER

PROJECT NAME

DRAWING TITLE:

Designed By			Project No.	
Checked By			Dwn. Stage	
Reviewed By			Discipline	
Design Manager			Scale	
Project Manager			Sheet No.	
Drawing No.				

Discipline	Signature	Discipline	Signature	Discipline	Signature	Discipline	Signature	Discipline	Signature
CI		AR		ST		PP		HV		PL

Autodesk